Supplying industrial fasteners for 30 years



Staytite

dedicated to meeting all your fastening needs

Introduction

"We are dedicated to customer service and supplying high quality products at competitive prices. Our specialised team provides you with excellent support and bespoke engineered solutions."

Andrew Black, Managing Director

Staytite provides industrial fasteners to original equipment manufacturers in a range of industries around the world, from aerospace to telecommunications.

The broad product range of more than 4,000 fasteners includes leading brands such as Barb, Carp, Hardlock and Staytite. We also have the capability to source and supply bespoke components to meet your needs.

At Staytite we provide reliable fastening solutions which make your production more efficient and cost-effective.

Staytite is a family-owned business that was established in 1978. During this time we have built an unrivalled wealth of knowledge and expertise in industrial fastening applications to offer the solution you need.

Trading from our purpose built industrial headquarters in High Wycombe, we have successfully met the challenges presented by customers in the automotive, aerospace, hand tool, white goods, electronics and telecommunications industries.

Staytite's range of more than 4,000 products includes fasteners, nuts and screws that are suitable for the following industries:

- Industrial Equipment
- IT/Electronics
- Instrumentation
- Oil & Gas and mining equipment
- Automotive
- Marine
- Aerospace
- OEMs, direct line feeders and distributors
- Subcontract manufacture
- HVAC
- Railways

Barb & Carp nuts • Hardlock nuts • Staytite nuts • Flange nuts • SEMS • Flange screws • Specials

In addition to the large range held as stock items, Staytite offers a custom-made service which turns customers' unique designs into bespoke fasteners. The company's expertise ensures that this occurs rapidly and effectively.

Andrew Black

Andrew Black
Managing Director

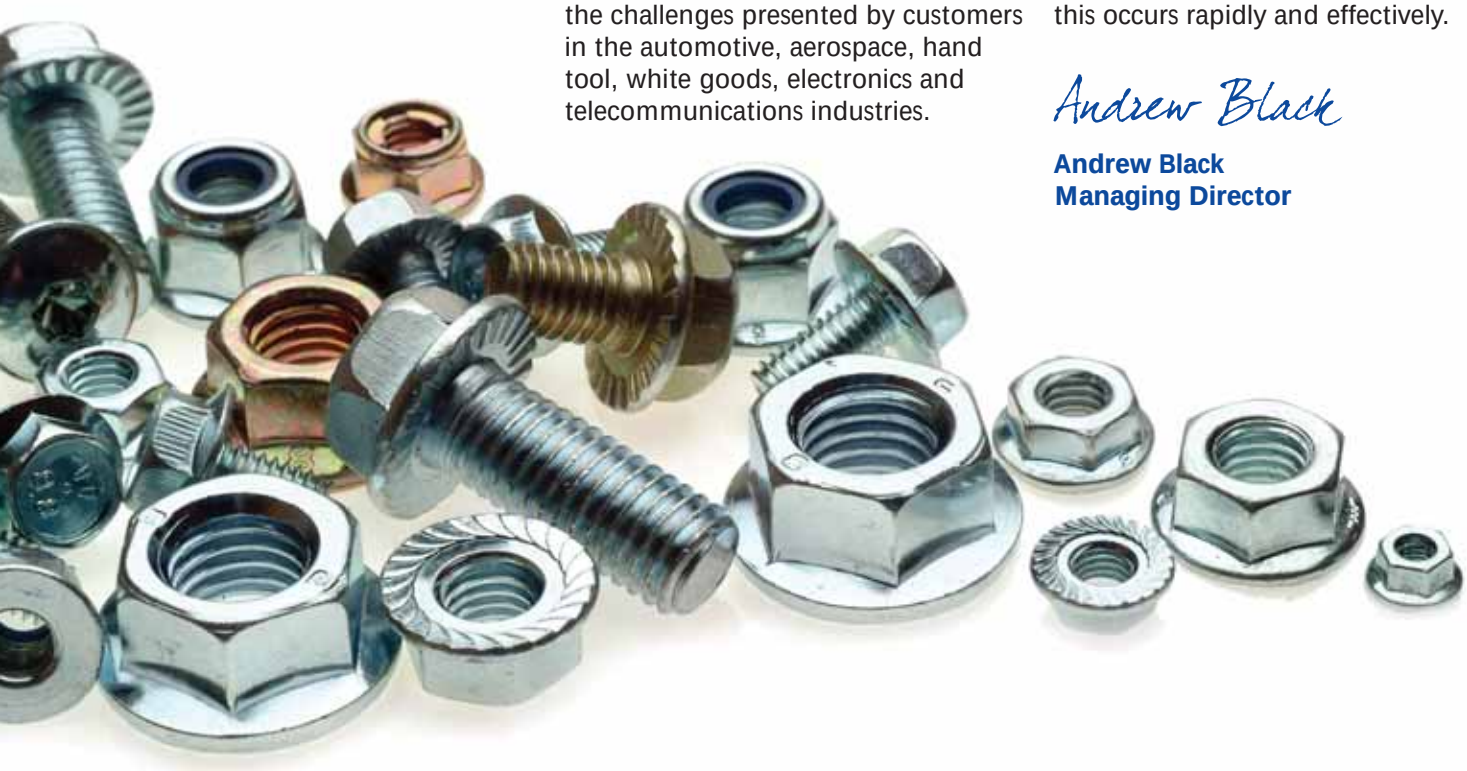

Barb & Carp nuts
Hardlock nuts
Staytite nuts
Flange nuts
SEMS
Flange screws
Specials

Putting customers first

At Staytite, we are dedicated to customer service and aim to surpass expectations.

Our highly trained, experienced staff and senior personnel are always available to deal with your enquiries, from design advice to general fastening queries. We believe that by working closely with both customers and suppliers we can achieve greater efficiency and cost reductions.

Your orders for our regular stocked items, whether SEMS units, self locking nuts or other fasteners can be dispatched within 24hrs from ordering. We can also hold parts against call-off and scheduled orders, and they are delivered as required. All deliveries include customer's order number, description, and customer's part number when supplied.

We can supply the following services:

SHIP TO STORES • JIT - DLF • KAN-BAN • BOXED QUANTITIES • BAGGED QUANTITIES • BINNED QUANTITIES • SCHEDULE AND CALL-OFF • BATCH TRACEABILITY

First class quality

We are committed to quality of our service and products. We operate a Quality Management System accredited to ISO 9001 : 2008.

We are able to produce and supply to S.P.C., Zero Defect, Optical Sort, DIN, ISO, JIS, and to British Standard specifications, and hold approvals by many leading global companies.

Staytite has strong relationships with its suppliers. Staytite has strict quality standards and in-house inspection is rigorous.

Technical excellence

Through our worldwide network of suppliers we are able to keep abreast of the latest innovations and can offer customers the most up-to-date technology available in the fastener industry. This, together with advice on cost reduction measures such as Product Realisation, Partnership Sourcing, Stock Management Systems and alternative Supply Methods, will enable you to reduce both your production times and costs.



Export details

We have local representatives throughout Europe and we export our fasteners to more than 24 countries.

Our experts will be happy to talk to you about your requirements and offer advice on our extensive product range. We are confident we have a solution for you from our thousands of fasteners.

Orders can be delivered within three working days.



Index

Staytite nuts	06
Weldable Staytite nuts	08
Flange nuts	09
Bi-way nuts	10
Stayloc nuts	11
Barb nuts	12
Carp nuts	13
Hardlock nuts	14
SEMS	16
Thread Cutting screws	19
Thread Forming screws	20
Socket screws	21
Hexagon Bolts	22
Machine screws	23
Flange bolts	24
Specialist parts	25
Standard parts	26
Key beliefs	27



Staytite nuts

Staytite nut is an all metal self-locking nut

Materials

- Class 8 zinc and clear (Cr3) trivalent
- A2 AISI 304 Stainless Steel
- A4 AISI 316 Stainless Steel

They are available in four different styles: Standard, Thin, Dome and Flange.



ISO METRIC THREADS (6H fit)

Size		Width Across		Thickness		Thread	Thickness		Flange Nut	
mm		Flats				Length	Reduced Height Nut		Width Across Flange	Width Across Flats
mm	Pitch	Basic	Min.	Basic	Allowance	Basic	Basic	Allowance	Nominal	Nominal
M4	0.70	7	6.80	3.80	±0.3	3.00	3.10	±0.3	11.00	6.00
M5	0.80	8	7.80	4.60	±0.3	3.90	4.00	±0.3	13.00	6.90
M6	1.00	10	9.80	5.10	±0.3	4.20	4.00	±0.3	17.00	8.50
M8	1.25	13	12.75	7.30	±0.4	6.10	5.00	±0.4	19.00	10.00
M10	1.5/1.25	17	16.75	8.30	±0.4	7.10	6.50	±0.4	24.00	12.50
M12	1.75/1.25	19	18.65	10.50	±0.4	9.00	8.50	±0.4	26.00	15.00
M14	2.0/1.5	22	21.65	12.50	±0.5	11.00	9.50	±0.5	30.00	16.50
M16	2.0/1.5	24	23.65	14.50	±0.5	13.00	12.00	±0.5	32.00	18.00
M18	2.5/1.5	27	26.65	16.00	±0.5	14.00	12.00	±0.5		
M20	2.5/1.5	30	29.65	17.50	±0.5	15.40	14.00	±0.5		
M22	2.5/1.5	32	31.60	19.50	±0.6	17.20				
M24	3.0/1.5	36	35.60	21.50	±0.6	18.80	16.00	±0.6		
M27	3.0/1.5	41	40.60	24.00	±0.6	21.20				
M30	3.5/1.5	46	45.60	27.00	±0.8	24.00				
M33	3.5/1.5	50	49.60	29.50	±0.8	26.50				
M36	4.0/3.0	55	54.55	32.50	±1.0	29.50				
M39	4.0/3.0	60	59.55	35.00	±1.0	31.80				
M42	4.5/3.0	65	64.55	38.00	±1.5	34.50				
M45	4.5/3.0	70	69.55	40.00	±1.5	36.00				
M48	5.0/3.0	75	74.55	42.00	±1.5	38.00				
M52	5.0/3.0	80	79.45	46.00	±2.0	42.00				
M56	5.0/4.0	85	84.45	49.00	±2.0	45.00				
M62	5.5/4.0	90	89.45	52.00	±2.0	48.00				
M64	6.0/4.0	95	94.45	54.00	±2.0	50.00				





EASY TO FIT

Every Staytite nut is assembled with a stainless steel spring insert. As the nut is installed on the screw thread, the stainless steel spring insert engages with the base of the screw thread and flexes upwards. This gives the nut a lower installation torque compared to other types of self-locking nut, particularly those of the deformed thread type.

RESISTANT TO VIBRATION AND LOOSENING

During use the Staytite nut resists vibration and loosening because the insert flexes downwards and is 'pulled' into closer contact with the screw thread by the upwards anti-clockwise rotation of the nut body. This also produces a very effective interference fit between the threads of the nut and of the screw.

EXCELLENT VALUE

The nut has a thin profile which enables the use of smaller, less costly bolts.

ISO METRIC THREADS (coarse pitch series) — Recommended Tightening Torques

Surface treatment	PLAIN			ZINC PLATED			Hot Dip. Galv.	Plain
Strength Grade Bolt Size mm	**4.8**	**8.8**	**10.9**	**4.8**	**8.8**	**10.9**	**4.8**	**Stainless Steel Proof stress** 300N/mm² (30.6kg/mm²)
M4 x 0.7	1.8 (18)	-	-	2.2 (22)	-	-	-	1.9 (19)
M5 x 0.8	3.7 (38)	7.4 (75)	10 (100)	4.4 (45)	8.7 (89)	12 (120)	-	3.8 (39)
M6 x 1.0	6.3 (64)	13 (130)	18 (180)	7.4 (75)	15 (150)	21 (210)	-	6.5 (66)
M8 x 1.25	15 (150)	30 (310)	43 (440)	18 (180)	36 (370)	51 (520)	23 (230)	16 (160)
M10 x 1.5	30 (310)	60 (610)	85 (870)	36 (370)	71 (720)	100 (1000)	45 (460)	31 (320)
M12 x 1.75	53 (540)	105 (1050)	145 (1500)	62 (630)	125 (1250)	175 (1800)	79 (810)	55 (560)
M14 x 2.0	84 (860)	165 (1700)	235 (2400)	99 (1000)	200 (2050)	280 (2850)	125 (1250)	87 (890)
M16 x 2.0	130 (1350)	260 (2650)	365 (3700)	155 (1600)	310 (3150)	435 (4450)	195 (2000)	135 (1400)
M18 x 2.5	180 (1850)	360 (3650)	510 (5200)	210 (2150)	425 (4350)	600 (6100)	270 (2750)	185 (1900)
M20 x 2.5	255 (2600)	510 (5200)	720 (7350)	300 (3050)	600 (6100)	850 (8650)	385 (3950)	265 (2700)
M22 x2.5	345 (3500)	690 (7050)	970 (9900)	410 (4200)	820 (8350)	1150 (11700)	520 (5300)	360 (3650)
M24 x 3.0	440 (4500)	880 (8950)	1240 (12600)	520 (5300)	1040 (10600)	1470 (15000)	660 (6750)	450 (4600)
M27 x 3.0	640 (6550)	1290 (13200)	1810 (18500)	760 (7750)	1530 (15600)	2150 (21900)	970 (3300)	670 (6850)
M30 x 3.5	880 (8950)	1750 (17800)	2460 (25100)	1040 (10600)	2070 (21100)	2920 (29800)	1320 (13500)	910 (9300)
M33 x 3.5	1190 (12100)	2380 (24300)	3350 (34200)	1410 (14400)	2820 (28800)	3970 (40500)	1800 (18400)	1240 (12600)
M36 x 4.0	1530 (15600)	3060 (31200)	4300 (43800)	1810 (18500)	3620 (36900)	5100 (52000)	2310 (23600)	1590 (16200)
M39 x 4.0	1980 (20200)	3950 (40400)	5570 (56800)	2340 (23900)	4690 (47800)	6590 (67200)	2980 (30400)	2060 (21000)
M42 x 4.5	2450 (25000)	4890 (49900)	6880 (70200)	2900 (29600)	5800 (59100)	8150 (83100)	3690 (37600)	2540 (25900)

Unit NM (KGF.CM) Figures are for guidance purposes only and may vary depending on application

Weldable Staytite nuts

The Staytite weldable collar nut has a self locking ring in the collar

Materials

- Mild Steel

The nut is suitable if you have a problem installing a lock nut with a bolt whereby you can't reach the bolt to install a lock nut.

The nut can be spot welded easily to your product and then the bolt tightened into the nut. This gives you an instant locking and anti vibration assembly.

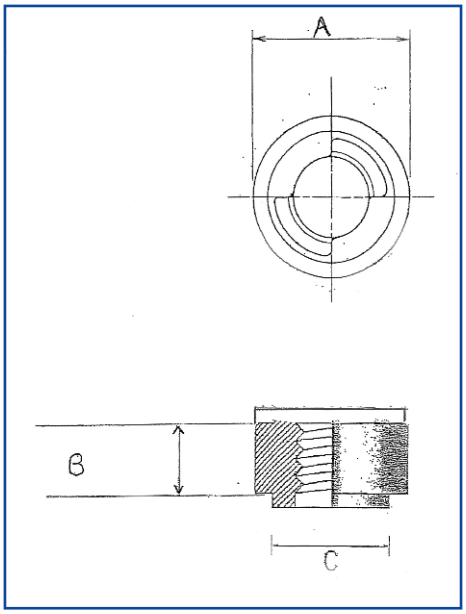

	M6	M8	M10	M12
Body Diameter A	13.00	16.00	19.00	25.00
Length of Body B	5.00	6.00	7.00	8.00
Spigot Diameter C	9.50	12.70	15.25	19.20
Spigot Length	2.05	2.05	2.05	2.05





Flange nuts

Serrated and non-serrated hexagon flange nuts

TECHNICAL DATA - DIN 6923

THREAD	DIA	ACROSS FLATS mm	OVERALL HEIGHT mm	NUT HEIGHT mm
M5	11.80	8.00	7.1	4.70
M6	14.20	10.00	9.1	5.70
M8	17.90	13.00	11.1	7.60
M10	21.80	15.00	13.5	9.60
M12	26.00	18.00	16.1	11.60
M16	34.50	24.00	20.3	15.30
M20	42.80	30.00	24.8	18.90

TECHNICAL DATA - DIN 6926 and DIN 6927

THREAD	PITCH	ACROSS FLATS mm	FLG	OVERALL HEIGHT mm
M5	0.75	8.00	11.8	6.2
M6	1.00	10.00	14.2	7.3
M8	1.25	13.00	17.9	9.4
M10	1.50	15.00	21.8	11.4
M12	1.75	18.00	26.0	13.8
M16	2.50	24.00	34.5	18.3
M20	2.50	30.00	42.8	22.4

Cost effective

Easy to install

Reliable

Also available with Nylon insert to DIN 6926

Materials

- Low Carbon Steel
- High Carbon Steel
- A2 Stainless Steel

Manufactured in accordance with DIN 6923 standards.





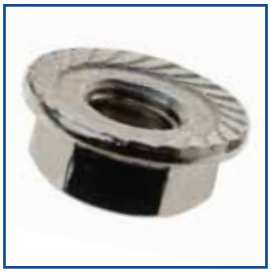

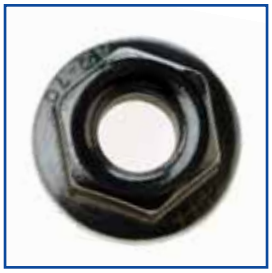

Bi-way nuts

Bi-way nut is a two-way reversible self-locking lock nut

Materials

- Class 8 Zinc and clear (Cr3) trivalent

Efficient locking

It features side indentations which slightly distort the centre thread. This creates a locking action when the distorted threads engage the threads of the mating part.

Reduced production cost

The top and bottom of the nut are the same. This means the nut can be assembled from either side which reduces assembly and production costs.

Manufactured in accordance with DIN 980V performance



TECHNICAL DATA - DIN 934

DIA	PITCH	OVERALL HEIGHT mm	ACROSS FLATS mm
M5	0.80	4.0	8.00
M6	1.00	5.0	10.00
M8	1.25	6.5	13.00
M10	1.50	8.0	17.00
M12	1.75	10.0	19.00
M16	2.00	13.0	24.00



STAYLOC NUTS

Stayloc nut is a self-locking, prevailing torque type of hexagon lock nut

TECHNICAL DATA - DIN 980V

DIA	PITCH	OVERALL HEIGHT mm	ACROSS FLATS mm	FLANGE DIA mm
M5	0.80	6.20	8.00	11.80
M6	1.00	7.30	10.00	14.20
M8	1.25	9.40	13.00	17.90
M10	1.50	11.40	15.00	21.80
M12	1.75	13.80	18.00	26.00
M16	2.00	18.30	24.00	34.50
M20	2.50	22.40	30.00	42.80



Easy to install

It is simply screwed on to a thread.

Secure fastening

Also available with Flange

Cost effective

Materials

- Class 8 Zinc and clear (Cr3) trivalent

Manufactured in accordance with DIN 980V.

We can also offer Class 10 and 12 nuts with a minimum batch quantity and lead time.



Barb nuts

Cold formed hexagon nut combined with an external shakeproof washer

Nut materials

- Low Carbon Steel SAE1010
- Stainless Steel AISI 304
- A Hardness Rockwell C-30 Maximum

Washer materials

- Steel SAE1050-1065
- A Hardness Rockwell C-40-56 Maximum
- Stainless Steel

Nut and washer finishes

- RoHS compliant Cr3 clear chromate.

The washer and nut are one part, with the washer free to rotate on the nut. This gives several advantages over separate applications of washer and nuts.

- **One installation instead of two**
- **No lost washers**
- **Ensuring accurate assembly**
- **Reduced labour costs**
- **Increased productivity**
- **Easy installation in difficult and confined spaces**
- **Simple stock keeping and inventory control**





ISO METRIC THREADS (coarse pitch series)

		NUT				WASHER			
DIA	PITCH	Across Flats	Across Corner Min.	Thickness	OVERALL HEIGHT	Outside Diameter	Thickness	Part No.	WEIGHT IN GRAMS 1PC
M3	0.5	5.5	6.4	2.4	3.2	6.3	0.45	B-1030	0.35
M4	0.7	7.0	8.1	3.2	4.0	8.0	0.45	B-1040	0.75
M5	0.8	8.0	9.2	4.0	5.1	9.2	0.60	B-1050	1.16
M6	1.0	10.0	11.5	5.0	6.1	11.0	0.60	B-1060	2.37
M8	1.25	13.0	15.0	6.5	7.9	14.9	0.80	B-1080	4.90
M10	1.5	17.0	19.6	8.0	9.6	19.0	9.00	B-1010	11.55
M12	1.8	19.0	21.7	10.0	12.0	21.0	1.00	B-1012	16.40

Carp Nuts

Cold formed hexagon nut combined with a conical washer





The washer and nut are one part with the washer free to rotate on the nut. This gives several advantages over separate applications of washer and nuts.

- **One installation instead of two**
- **Reduced labour costs**
- **Increased productivity**
- **Easy installation in difficult and confined spaces**
- **Simple stock keeping and inventory control**
- **No lost washers**
- **Ensuring accurate assembly**

Nut materials

- Low Carbon Steel SAE1010
- Stainless Steel AISI 304
- A Hardness Rockwell C-30 Maximum

Washer materials

- Steel SAE1050-1065
- A Hardness Rockwell C-40-56 Maximum
- Stainless Steel

Nut and washer finishes

- RoHS compliant Cr3 clear or yellow chromate.

ISO METRIC THREADS (coarse pitch series)

		NUT			WASHER					
DIA	PITCH	Across Flats	Across Corner Min.	Thickness	Outside Diameter	Thickness	HEIGHT	Allowance	Part No.	WEIGHT IN GRAMS 1PC
M3	0.5	5.5	6.01	2.4	8	0.4	0.4	+0.2	c-1031	0.700
M4	0.7	7.0	7.66	3.2	10	0.5	0.4	+0.2	c-1041	0.940
M5	0.8	8.0	9.21	4.0	12	0.8	0.4	- 0	c-1051	1.610
M6	1.0	10.0	11.5	5.0	14	1.0	0.4		c-1061	3.130
M6	1.0	10.0	11.5	5.0	16	1.4	0.4		c-1062	3.900
M6	1.0	10.0	11.5	5.0	18	1.4	0.4		c-1063	4.620
M8	1.25	12.0	13.9	6.5	18	1.4	0.6		c-1081	6.670
M8	1.25	13.0	15.0	6.5	18	1.4	0.6	+0.25	c-1082	7.020
M8	1.25	12.0	13.9	6.5	20	1.6	0.8	- 0	c-1083	7.750
M8	1.25	12.0	13.9	6.5	22	1.6	0.8		c-1084	9.070
M8	1.25	13.0	15.0	6.5	20	1.6	0.8		c-1085	8.100
M8	1.25	13.0	15.0	6.5	22	1.6	0.8		c-1086	9.400
M10	1.25	14.0	16.2	8.0	22	1.6	0.8		c-1101	9.060
M10	1.50	17.0	19.6	8.0	22	1.6	0.6		c-1102	14.160
M10	1.25	17.0	19.6	8.0	24	2.4	1.0		c-1103	12.390
M10	1.50	17.0	19.6	8.0	24	2.4	1.0	+0.35	c-1104	17.490
M12	1.25	17.0	19.6	10.0	25.5	2.4	1.0	- 0	c-1121	17.860
M12	1.75		21.9	10.0	25.5	2.4	1.0		c-1122	22.760

Hardlock nuts

Hardlock Nut is a combination of a concave upper nut and convex lower nut

Materials

- Low Carbon Steel
- High Carbon Steel
- AISI 304 Stainless Steel
- AISI 316 Stainless Steel

Finishes

- Zinc plate
- Hot dipped galvanized

Secure and anti-loosening

The nuts resist loosening in environments where high vibration occurs. They provide a secure fastening to many applications including railways, civil engineering, radar, power masts, pylons, wind turbine towers and masts.

Low lifetime cost

The reliable nuts require less inspection and maintenance than traditional nuts and users can reduce associated costs.

Hardlock nuts with flange are also available. For further details please request a copy of our Hardlock brochure or give us a call.



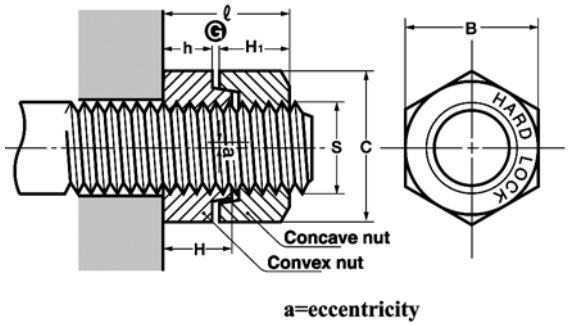



Technical Data

SIZE	PITCH	H CONVEX NUT		H1 CONCAVE NUT		B WIDTH		C	L HEIGHT		h	WEIGHT	Convex nut (fastening nut) Tightening torque figure by material (ref. only)				Concave nut (lock nut)
dia.	pitch	mm	allowance	mm	allowance	mm	allowance	approx	mm	allowance	approx	gms/set	Class 4	Class 8	Class 10	Class A2	Tightening torque
M6	1.0	5	0 -0.48	5	0 -0.48	10	0 -0.6	11.5	8.3	±0.6	3.3	3.3	2.3-6.0	4.6-12	6.5-17	3.3-9.0	4.0-5.0
M8	1.25	6.5	0 -0.58	6.5	0 -0.58	13	0 -0.7	15	11	±0.8	4.5	8.6	5.6-15	11.2-30	15.8-42	7.9-21	9.0-13
M10	1.5	8	–	8	–	17	–	19.6	13.5	–	5.5	17.6	11-30	22-59	31-84	16-42	18-24
M12	1.75	10	–	10	–	19	0 -0.8	21.9	17	–	7.0	27.3	19-52	39-104	55-146	27-73	27-39
M14	2.0	11	0 -0.7	11	0 -0.7	22	–	25.4	18.5	±1.2	7.5	39	31-82	62-165	87-232	44-116	40-58
M16	2.0	13	–	13	–	24	–	27.7	22.5	–	9.5	52.8	48-129	97-257	136-362	68-181	70-100
M18	2.5	15	–	15	–	27	–	31.2	25.5	–	10.5	80	66-177	133-354	187-498	44-116	100-150
M20	2.5	16	–	16	–	30	–	34.6	27.5	–	11.5	105	94-251	188-502	265-706	62-165	120-200
M22	2.5	18	–	18	–	32	0 -1.0	37	31.5	–	13.5	130	128-341	256-683	360-960	84-224	150-250
M24	3.0	19	0 -0.84	19	0 -0.84	36	–	41.6	33	±1.8	14	180	163-434	325-868	458-1220	107-285	160-300
M27	3.0	22	–	22	–	41	–	47.3	38	–	16	246	238-635	458-1269	669-1785	156-416	250-390
M30	3.5	24	–	24	–	46	–	53.1	42	–	18	375	323-862	646-1723	909-2424	212-566	270-440
M33	3.5	26	–	26	–	50	–	57.7	46	–	20	480	440-1173	879-2345	1237-3298	289-770	290-440
M36	4.0	29	–	29	–	55	0 -1.2	63.5	50	–	21	630	565-1506	1129-3012	1588-4235	371-988	340-590
M39	4.0	31	0 -1.0	31	0 -1.0	60	–	69.3	54	±2.2	23	935	731-1949	1462-3898	2056-5481	480-1279	390- 640



Use a spanner to tighten the convex nut to the correct torque. (see chart)



Thread down the concave nut onto the convex nut manually.



Tighten the concave nut with the spanner, about one turn. (see chart)

If the concave nut is not sufficiently tightened, it may become loose.

How it works:

The concave upper nut is threaded down until the concentric conical recess comes into contact with the eccentric conical protrusion of the convex lower nut.

The convex lower nut is held stationary, either by being seated, or by being held stationary with a spanner if seating is not required.

When the convex upper nut is tightened to the recommended tightening torque, locking forces between the upper and lower nuts are induced.

Installation Hints:

- Make sure all parts and threads are clean and undamaged thereby ensuring the best assembly. Thread accuracy is 6H.
- ANTI-SEIZE lubricant is recommended on all bolts and/or shafts along with the nut to prevent galling and seizing.
- It is desirable to have at least two threads extended beyond the top of the new assembly.
- For fastening refer to the tightening torque table.
- Never install or remove both upper and lower nuts simultaneously.



Lock effect – $P_1+P_2+P_3$

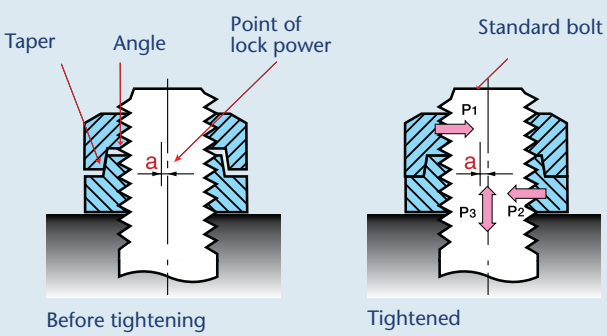

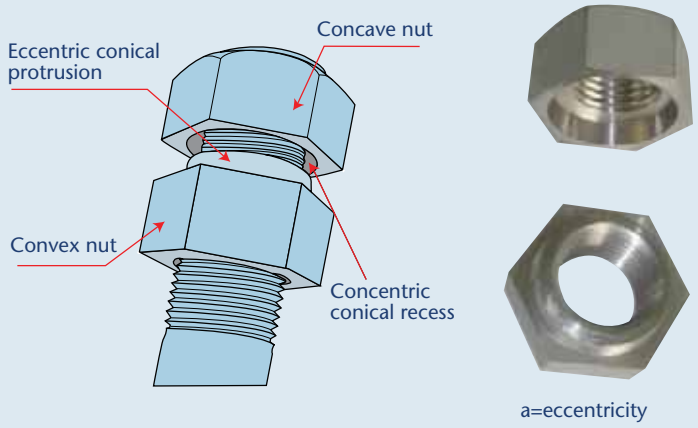

SEMS

Pre-assembled SEMS fasteners combine a screw with one or more free spinning captive washers

We have the ability to create almost any type of washer and screw combination to meet customer specification. There are hundreds of combinations to choose from within our large stock and extended ranges.





HI - LO

Thread Type

Machine Screw
Self Tapping
Thread Cutting
Thread Forming
HI LO



pozi

Drive Type

Pozi
Phillips
Slotted
Combi
6 Lobe
Hex
Other

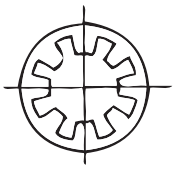

internal

Washer Type

Flat
Spring
Square
Conical
Internal Tooth
External
Single or Double

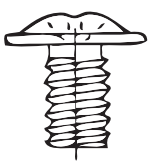

pozi flange

Head Type

Hexagon
Pan
CSK
Flange
Socket Cap/Button
Round
Cheese

SEMS

- **Quick and easy installation in difficult and confined spaces**
- **One operation instead of two**
- **Halving of labour costs**
- **Increased productivity**









Sizes

- M2 – M12
- No. 2 – No.14

Materials

- Steel
- Brass
- Stainless Steel

Finishes

- Zinc Clear
- Zinc Yellow
- Zinc Black
- Black Oxide
- Nickel
- Self Colour



SEMS







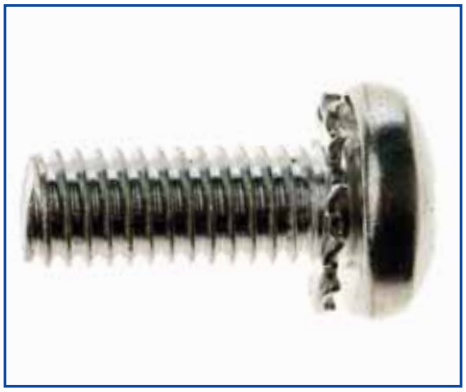







Thread Cutting screws

Designed to cut their own mating thread as they are driven into the material

Self Tapping Screws

- **Type C** (Type AB) has a gimlet point.
- **Type F** (Type B) has a blunt, tapered point.
- **Type U** Hammer drive for fastening heavy gauge metal sheet.

Thread Cutting Screws for Metal

- **Type D** has a blunt, tapered point with one cutting flute.
- **Type F** has a blunt, tapered point, with multiple flutes.
- **Type G** has a blunt, tapered point, with a cutting slot.
- **Type T or 23** has a blunt, tapered point, with a wide milled cutting slot.



Materials

- Hardened Steel
- Stainless Steel

Thread Cutting Screws for Plastics

- **Type BT or 25** has a blunt, tapered point, and a wide milled cutting slot.
- **Type BF** has a blunt, tapered point, with multiple flutes.
- **Type Y** has a spaced thread and pilot point similar to Type B but with the addition of five cutting flutes extending the full length of the shank.

We have a wide selection of heads and drives available for our self tapping, thread cutting and thread forming screws. Please contact us with your specific requirements.





Thread Forming screws

Materials
- Hardened Steel
- Stainless Steel

Thread forming screws do not remove any material, rather, the process displaces the materials to generate the thread form. The screw has a tapered point, which, as it enters the pilot hole, widens the hole and compresses the displaced material.



Quick and easy process

- One operation is eliminated as no thread tapping is required
- Suitable for use in metal, plastic or wood.

Types Available

HI-LOW
A twin thread hardened screw where the angle and height of one thread is different to the other.

Twin threads enable a faster insertion of the screw and features a lower insertion torque.

- 'LOW' thread reduces risk of splitting and cracking material.
- 'HIGH' thread significantly increases resistance to stripping.
- Available with blunt or gimlet point.

Trilobular thread forming screws for metal or plastic.

- Perfectly mated threads, mean a greater resistance to pull out vibration.

30° thread angle TV Screw
- For soft and medium density plastics.
- Avoids splitting of mating material.

We have a wide selection of heads and drives available for our self tapping, thread cutting and thread forming screws. Please contact us with your specific requirements.



Socket screws

The socket screw is a threaded fastener with an internal hexagon drive

Materials

- Stainless Steel
- High Tensile Steel

Easy to install

Customers can use a hexagon key to tighten or loosen the screws. It is commonly used in assemblies that do not provide sufficient clearance for a conventional wrench or socket.

We stock various sizes and finishes to suit customers specific requirements with a range of head designs.

- Cap
- Countersunk
- Button
- Socket set – flat point
- Socket set – cone point
- Socket set – dog point
- Socket set – cup point





	Preferred sizes	Materials	Din	BS		ANSI	ISO
				Metric	Unified		
CAP	M2.5 - M24	HT STEEL / STAINLESS	912	4168	2470	B18.3.1M	4762
COUNTERSUNK	M3 - M24	HT STEEL / STAINLESS	7991	4168	2470	IF1535	-
BUTTON	M2.5- M16	HT STEEL / STAINLESS	-	4168	2470	B18.3.4M	7380
SOCKET SET - FLAT POINT	M2.5 - M12	HT STEEL / STAINLESS	913	4168	2470	B18.3.6M	4026
SOCKET SET - CONE POINT	M2.5 - M12	HT STEEL / STAINLESS	914	4168	2470	B18.3.6M	4027
SOCKET SET - DOG POINT	M2.5 - M12	HT STEEL / STAINLESS	915	4168	2470	B18.3.6M	4028
SOCKET SET - CUP POINT	M3 - M12	HT STEEL / STAINLESS	916	4168	2470	B18.3.6M	4029

*Please call for specific size requirements. Stocked in various sizes and finishes.

Hexagon bolts

Hexagon bolt screws are large, robust bolt screws suitable for heavy duty applications

We stock fully threaded and part threaded bolt and setscrews in sizes M3 to M24 and lengths up to 200mm.

Materials

- High Tensile Steel
- Stainless Steel

Finishes

- Self colour
- Cr3
- Hot dipped galvanized



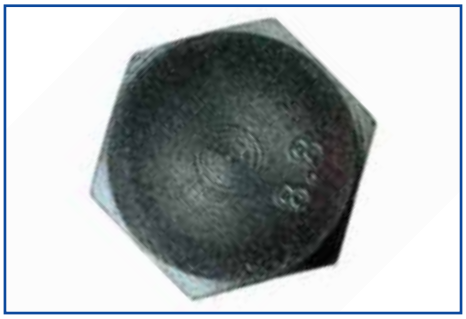



		Preferred sizes	Materials	Din	BS		ANSI	ISO
					Metric	Unified		
DRAWING	HEXAGON SETS	M3 - M24	HT STEEL / STAINLESS	933	3692	1768	B18.2.3.1M	4017
DRAWING	HEXAGON BOLTS	M4 - M24	HT STEEL / STAINLESS	931	3692	1768	B18.2.3.1M	4017

*Grade 8.8 and also available in 10.9

*Please call for specific size requirements. Stocked in various sizes and finishes.

Machine screws

Threaded screws for use in light assembly



We stock from M1.6 to M12 in various finishes and lengths.

Materials

- Stainless Steel
- Brass
- Steel

	Preferred sizes	Materials	Din
Pan Pozi	M2 - M6	STEEL / STAINLESS	7985A
Pan Slot	M2.5 - M10	STEEL / STAINLESS	85A
Cheese head Slot	M1.6 - M10	STEEL / STAINLESS	84A
Countersunk Slot	M1.6 - M12	STEEL / STAINLESS	963A
Countersunk Pozi	M2 - M6	STEEL / STAINLESS	965A
Hexagon	M2.5 - M6	STEEL / STAINLESS	7500D
Raised Countersunk Slot	M2 - M10	STEEL / STAINLESS	964A
Raised Countersunk Pozi	M2 - M6	STEEL / STAINLESS	966A

*Please call for specific size requirements. Stocked in various sizes and finishes.





Flange bolts

Serrated and non-serrated hexagon flange bolts and screws to DIN 6921, heavy series

Materials

- Stainless Steel
- High Tensile Steel

A one piece fastener designed to spread the clamping load without the need for a washer.

Serrated flange also enables a degree of self locking and vibration resistance.

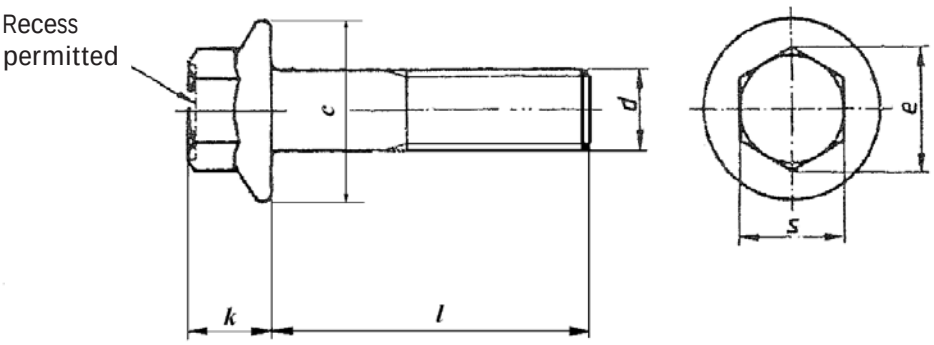

FLANGE BOLT

DIA	s max	e min	c max	k max
M5	8.00	8.71	11.80	5.40
M6	10.00	10.95	14.20	6.60
M8	13.00	14.26	18.00	8.10
M10	15.00	16.50	22.30	9.20
M12	16.00	17.62	26.60	11.50

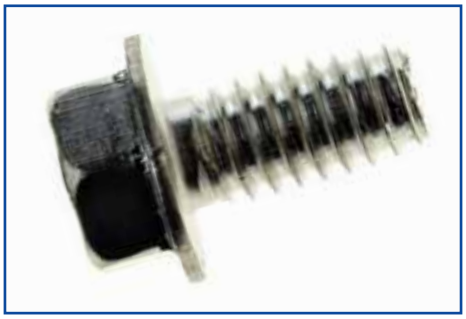



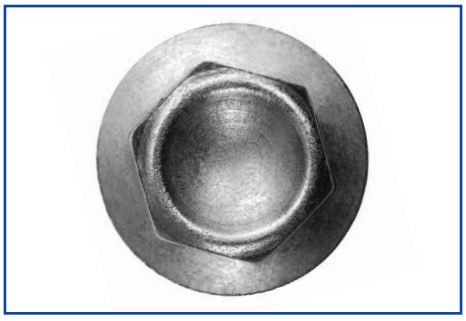



Specialist parts

At Staytite we also source and supply a range of non-standard items. We are happy to talk with you about your specific needs and recommend bespoke parts.



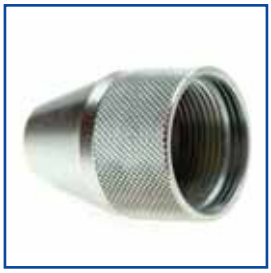









Standard parts

Staytite has a vast range of standard fasteners

- Washers
- Nuts
- Self Tapping Screws
- Machine Screws
- Bolts
- Setscrews
- Pins
- Circlips
- Inserts
- Studs
- Rivets
- Turned parts
- Pressing/Springs
- Plastic Parts



Key beliefs

Our key beliefs have helped define Staytite and they continue to shape each of us in our business relationships with one another, our customers, suppliers, competitors and the communities in which we live and operate. Each of us is expected to demonstrate these key beliefs in our work.

Uncompromising integrity means staying true to what we believe. We adhere to honesty, fairness and doing the right thing without compromise, even when circumstances make it difficult.

Constant respect for people means that we treat everyone with dignity. Constant respect applies to every individual we interact with around the world.

The Code sets ethical standards for the way we conduct business. This includes dealing with other employees, customers, suppliers, and business partners.



Staytite Ltd • Staytite House
Coronation Road
Cressex Business Park
High Wycombe • HP12 3RP

Tel 01494 462 322
Fax 01494 464 747

Email fasteners@staytite.com

www.staytite.com

